Glycolysis

The essential metabolic pathway of glycolysis involves the oxidative breakdown of one glucose into two pyruvate with the capture of some energy as ATP and NADH. Glycolysis is important in the cell because glucose is the main source of fuel for tissues in the body. For example, glucose is the only source of energy for the brain. To ensure normal brain function, the body must maintain a constant supply of glucose in the blood. Glycolysis is also important because the metabolism of glucose produces useful intermediates for other metabolic pathways, such as the synthesis of amino acids or fatty acids.

The major themes to remember when studying glycolysis include:

- Glycolysis is a sequence of enzymatic reactions
- ATP is invested, then recaptured with a net gain of 2 ATP
- Pathway is regulated at key steps when $\Delta G << 0$
- Production of useful intermediates for other metabolic pathways

Cellular respiration

Glycolysis is the first step of cellular respiration

1. Glucose ---> 2 Pyruvate

Anaerobic Respiration

In the absence of oxygen pyruvate is converted into lactate or CO_2 or malate

Pyruvate + NADH ---> Lactate + NAD^+

Pyruvate ---> CO_2 + acetaldehyde + NADH ---> ethanol + NAD^+

Pyruvate + CO_2 ---> OAA + NADH ---> Malate + NAD^+

OR

Aerobic Respiration

In the presence of oxygen pyruvate is converted into CO_2 and H_2O

Pyruvate ---> CO_2 + H_20

Overall Reaction for Aerobic Cellular Respiration

$$C_6H_{12}O_6 + 6O_2 \text{ ---> } 6CO_2 + 6H_20$$

$$\Delta G^o = -2840 \text{ KJ/mol}$$

In respiration some ΔG^o (~35%) is retained as formation as ATP

<u>Priming: Investment of Energy (2 ATP):</u> There are **five** reactions during the priming phase

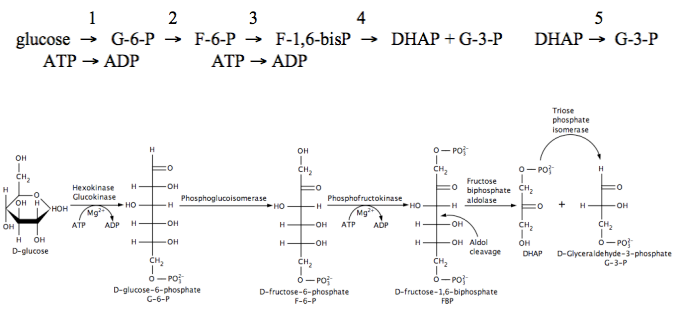

Note: Mg^{2+} is required if ATP is needed (1 per ATP molecule)

Reaction 1: Hexokinase and Glucokinase pick up a phosphate from ATP and bind it to glucose.

$$\Delta G^{o'} = +13.8 \text{ kJ/mol}$$
$$= -30.5$$
$$-16.7$$
$$\Delta G' = \Delta G^{o'} + RT\ln[P]/[R]$$
$$= -33.9$$

- Reactions with an overall ΔG << 0 can be regulated (turn the enzyme on or off)
- Hexokinase is allosterically inhibited by G-3-P (Km~o.1mM)
- Glucokinase is not allosterically inhibited (Km ~10mM), keeps glucose in the cell

Reaction 2: Phosphoglucoisomerase converts glucose into fructose (changes the bonds around).

$\Delta G^{o'} = +1.67$ kJ/mol
$\Delta G' = -2.92$ kJ/mol

- Not regulated because ΔG is near equilibrium

Reaction 3: Phosphofructokinase picks up another phosphate from ATP and attaches it to fructose.

$\Delta G^{o'} = +16.3$ kJ/mol
$= -30.5$
-14.2
$\Delta G' = -18.89$

- ATP is an allosteric inhibitor
- AMP reverses ATP inhibition (if ATP decreases by 8%, AMP increase 4 fold)
- AMP is the controlling factor of the enzyme
- If ATP decreases and AMP increases, the reaction proceeds forward

Reaction 4: Fructose biphosphate aldolase splits F-1,6-bisP into two 3 carbon compounds

$\Delta G^{o'} = +23.8$ kJ/mol
$\Delta G' = -0.23$ kJ/mol

Reaction 5: Triose phosphate isomerase converts DHAP into G-3-P

$\Delta G^{o'} = +7.56$ kJ/mol
$\Delta G' = +2.41$ kJ/mol

<u>ΔG of overall reaction:</u>

glucose + 2 ATP → 2 G-3-P + 2 ADP

$\Delta G^{o'} = +63.13$ kJ/mol (glucose → 2 G-3-P)
-61.0 (2 ATP → 2 ADP)
2.13

$\Delta G' = -53.4$ kJ/mol (from relative concentrations in cells)

Payoff:

Internal Links

- http://chemwiki.ucdavis.edu/Biologic...ism/Glycolysis